BeadInsight_IP

Full 360° Coverage Real-time Processing Intuitive Operation

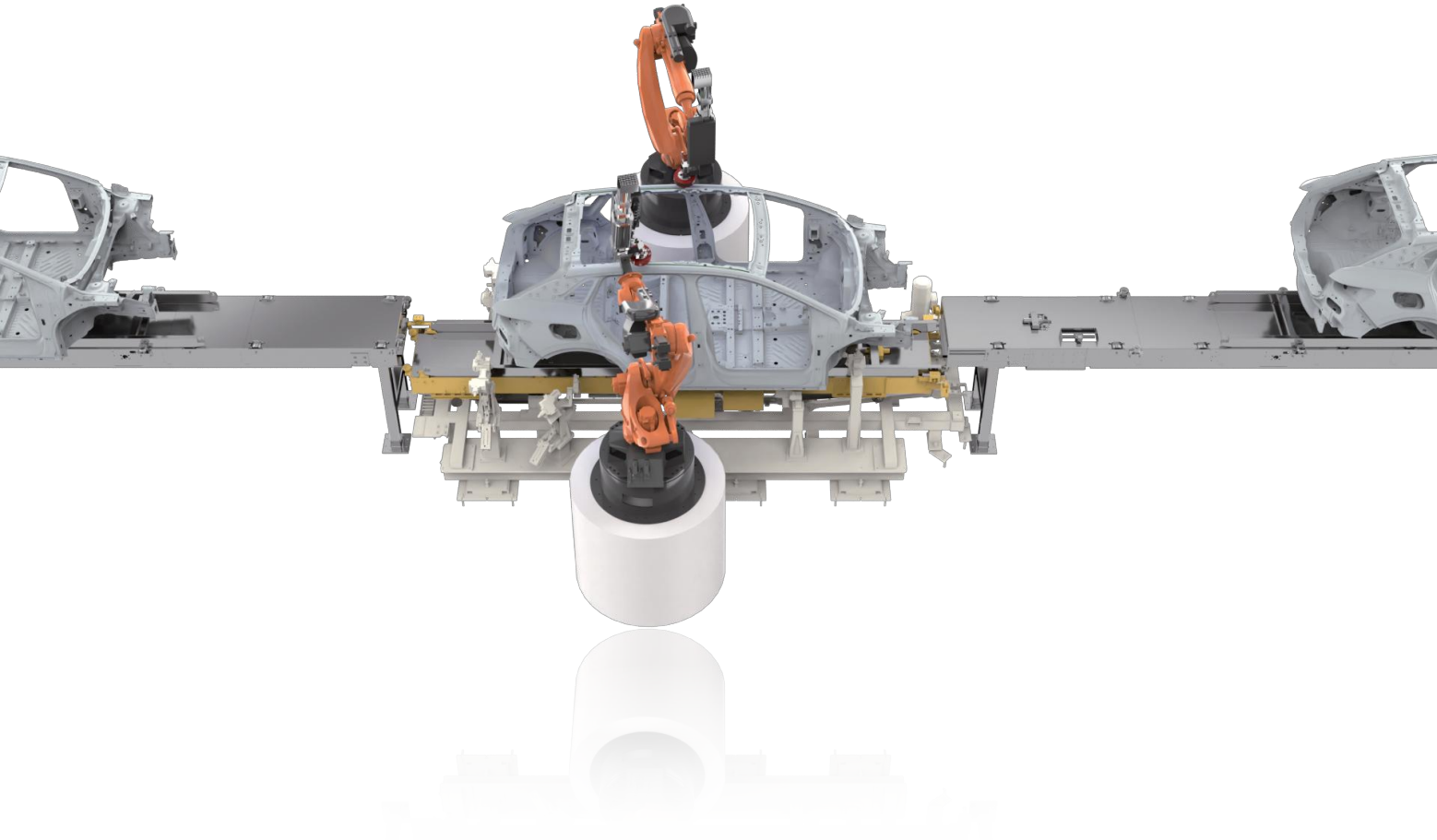

ISV EHR GmbH

TEL:+49 (0) 7231 9731 - 0
FAX:+49 (0) 7231 9731 - 9

E-mail:info@ehr.de
Address:Carl-Zeiss-Straße 15 D – 75217 Birkenfeld

In-line Adhesive Inspection Solution

OEM:Body shop,Battery Shop;Tier 1 Supplier

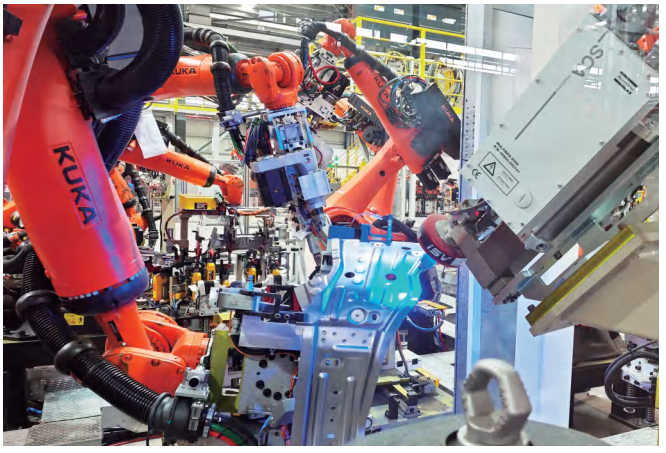

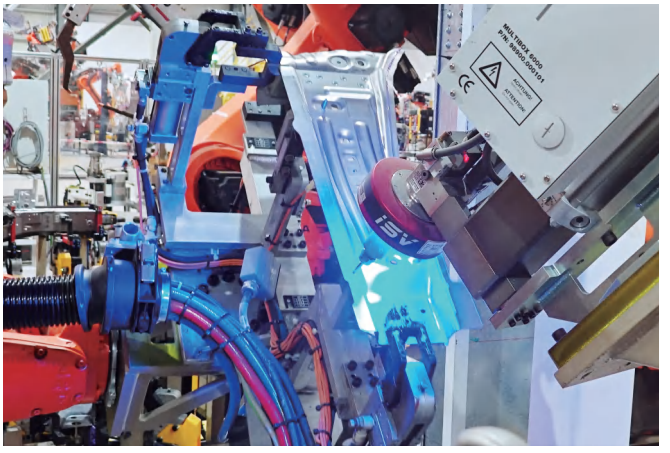

ISV Inline Glue Bead Inspection System employs real-time image processing and integrated sensors to monitor bead width, position, and continuity during automated dispensing.

Solution Advantages

01 100% Real-time Inspection

Full 360° coverage with zero blind spots.

02 User-friendly Interface

Bilingual GUI with intuitive controls.

03 Rapid Deployment

Multiple teaching modes (manual/auto/single-image replace).

04 Data Intelligence

Customizable analytics with complete traceability for sealing issues.

Adhesive Defect Inspection Categories

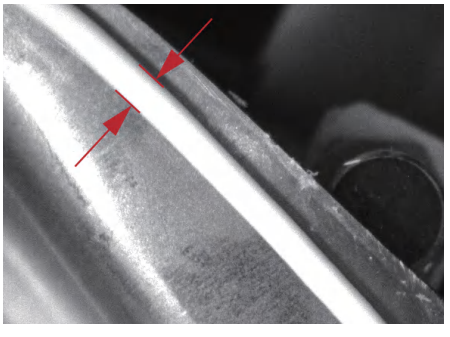

Bead Width

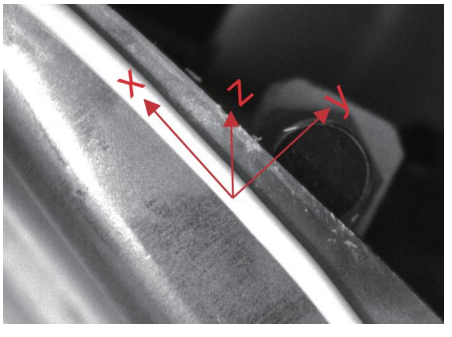

Bead Position

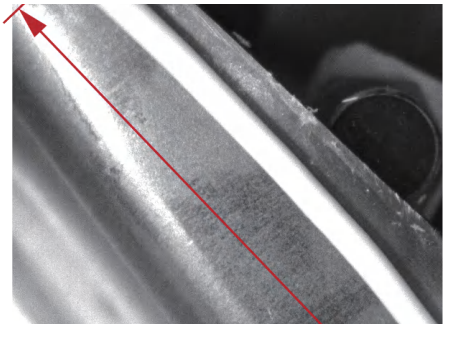

Bead Continuity