MachineEye

High Detection Rate Low False Calls Maximum Flexibility

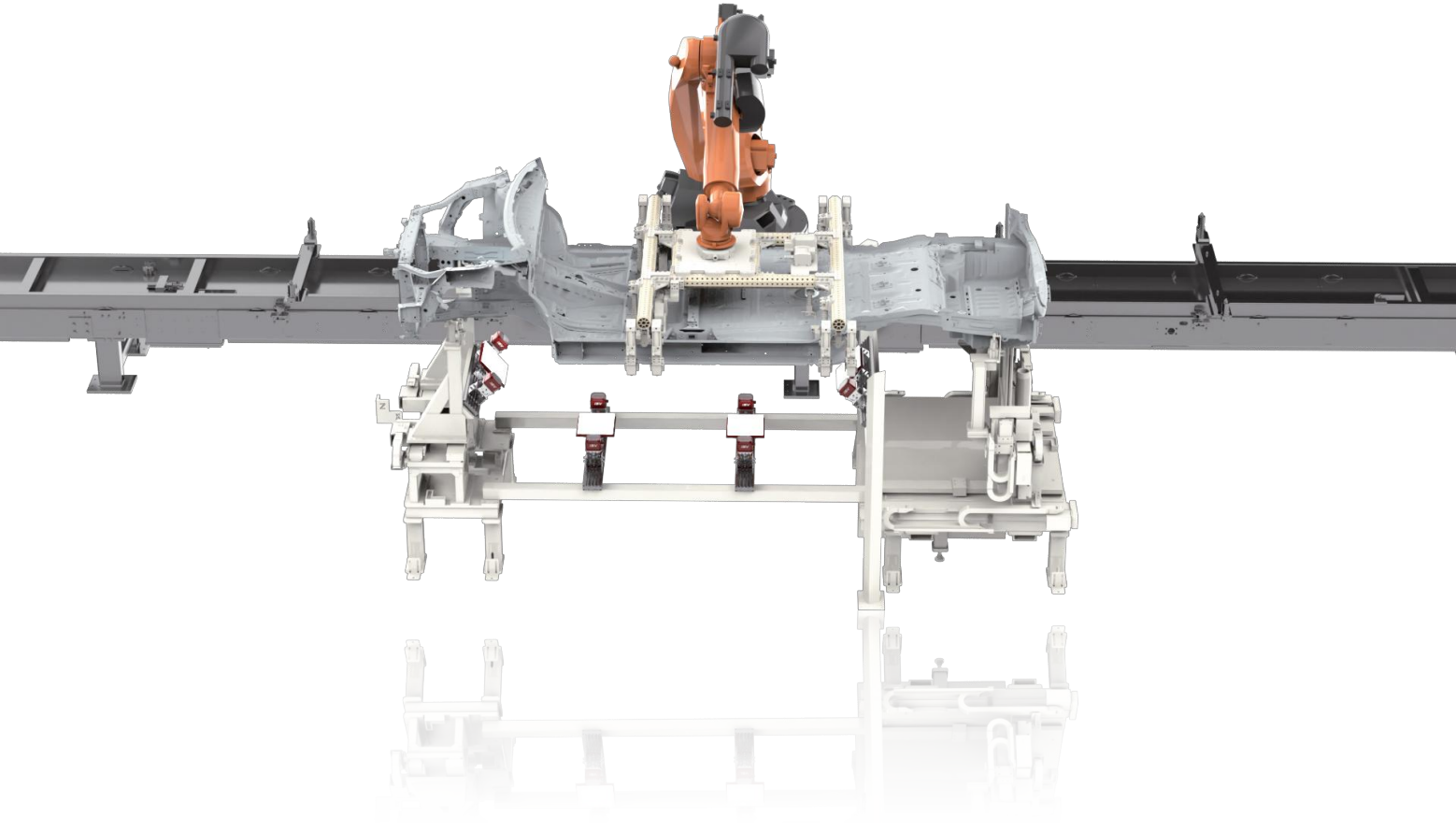

ISV EHR GmbH

TEL:+49 (0) 7231 9731 - 0
FAX:+49 (0) 7231 9731 - 9

E-mail:info@ehr.de
Address:Carl-Zeiss-Straße 15 D – 75217 Birkenfeld

Vision-Based Error Proofing Solution

OEM:Bodyshop;Tier 1 Supplier





ISV Vision-Based Error Proofing solution utilizes object-feature recognition technology to verify presence/absence of critical components (e.g. studs,bolts, foam parts),with active/passive error-proofing capabilities for mixed-model production lines.

Solution Advantages

01 Efficiency & Accuracy Boost

Exceeds manual inspection speed while eliminating human errors,with digitalizedresults accessibility.

02 Universal Deployment

Compatible with fixed/robot-mounted installations for complex line scenarios.

03 Traceability Integration

VIN/part-code binding enables real-time quality tracing.

Inspection Categories



Stud Presence Inspection



Nut Presence Inspection

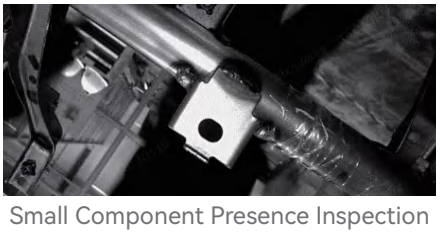

Small Component Presence Inspection



Hole Presence Inspection

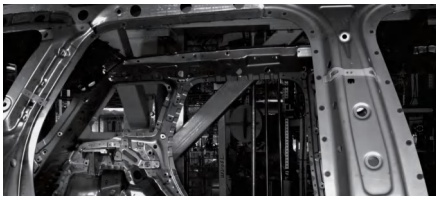

Foam Part Presence Inspection

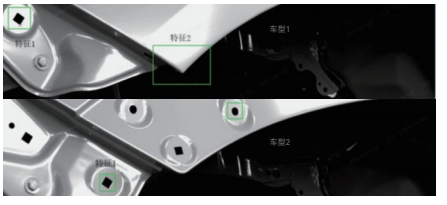

Model Identification & Error-proofing